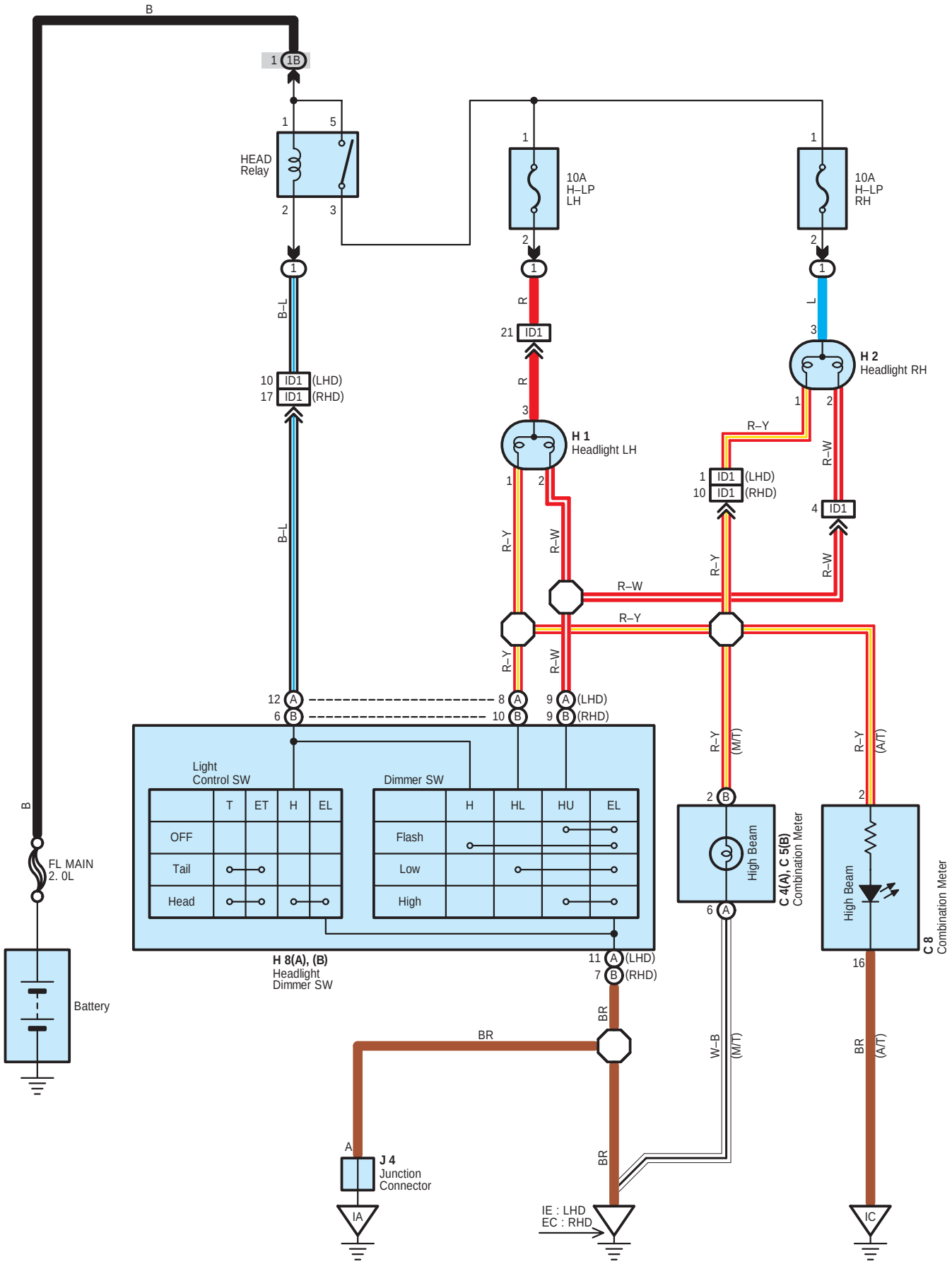
B
1 1B
HEAD Relay
1
5
2
3
10A H–LP LH
10A H–LP RH
B–L
R
L
21 ID1
10 ID1 (LHD)
17 ID1 (RHD)
H 1 Headlight LH
H 2 Headlight RH
R–Y
R–W
1 ID1 (LHD)
10 ID1 (RHD)
4 ID1
12 A
6 B
8 A
10 B
9 A (LHD)
9 B (RHD)
Light Control SW
T
ET
H
EL
OFF
Tail
Head
Dimmer SW
H
HL
HU
EL
Flash
Low
High
H 8(A), (B) Headlight Dimmer SW
11 A (LHD)
7 B (RHD)
(M/T)
(A/T)
2 B
6 A
High Beam
C 4(A), C 5(B) Combination Meter
2
16
C 8 Combination Meter
FL MAIN 2. 0L
Battery
BR
W–B
A
J 4 Junction Connector
IA
IE : LHD
EC : RHD
IC

○ : Parts Location

Code		See Page	Code	See Page	Code		See Page
C4	A	28 (LHD)	H1	24 (*1)	H8	A	28 (LHD)
		36 (*5)		26 (*2)		B	36 (*5)
		38 (*6)		32 (*3)			38 (*6)
C5	B	28 (LHD)		34 (*4)	J4		29 (LHD)
		36 (*5)	H2	24 (*1)			37 (*5)
		38 (*6)		26 (*2)			39 (*6)
C8		28 (LHD)		32 (*3)			
		38 (*6)		34 (*4)			

: Relay Blocks

Code	See Page	Relay Blocks (Relay Block Location)
1	22	Engine Room R/B (Engine Compartment Right)

: Junction Block and Wire Harness Connector

Code	See Page	Junction Block and Wire Harness (Connector Location)
1B	22	Engine No.2 Wire and Engine Room J/B (Engine Compartment Right)

: Connector Joining Wire Harness and Wire Harness

Code	See Page	Joining Wire Harness and Wire Harness (Connector Location)
ID1	44 (LHD)	Engine Room Main Wire and Instrument Panel Wire (Right Kick Panel)
	48 (*5)	Engine Room Main Wire and Instrument Panel Wire (Cowl Side Panel RH)
	49 (*6)	

: Ground Points

Code	See Page	Ground Points Location
EC	46 (*3)	Left Fender Apron
	47 (*4)	
IA	44 (LHD)	Right Kick Panel
	48 (*5)	Left Kick Panel
	49 (*6)	
IC	44 (LHD)	Cowl Side Panel LH
	49 (*6)	Right Kick Panel
IE	44 (LHD)	Cowl Side Panel LH

* 1 : LHD 3SZ–VE * 2 : LHD K3–VE * 3 : RHD 3SZ–VE * 4 : RHD K3–VE * 5 : RHD w/ Heater * 6 : RHD w/o Heater